MF69004-00080 SH WASH BASIN MIXER LATERAL CONT.

Product image

Dimensioned drawing

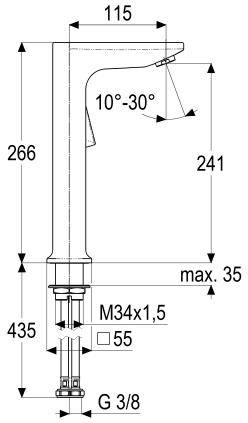

Product description

Wash basin mixer high
grey_line
flexible hoses 3/8" DIN DVGW
aerator flow rate class A
swivelling
lateral control
with push button waste
with shaft screw connection

Tender specification

MF69004-00080
Heinrich Schulte Manufacture
Wash basin mixer high
alpha_400
grey_line
reach 115 mm
height to aerator 240 mm
maximum height 265 mm
cartridge 35 mm
with hot water limiter
materials in accordance with German Drinking Water Regulations and FEA
lever metal
flexible hoses 3/8" DIN DVGW
aerator flow rate class A
swivelling
for deck mounted basins
lateral control
with push button waste
with shaft screw connection

VPE: 1
GTIN: 4020929114875
SCIP: e5b89a8e-598f-4368-ab55-418becb5388e

Exploded drawing

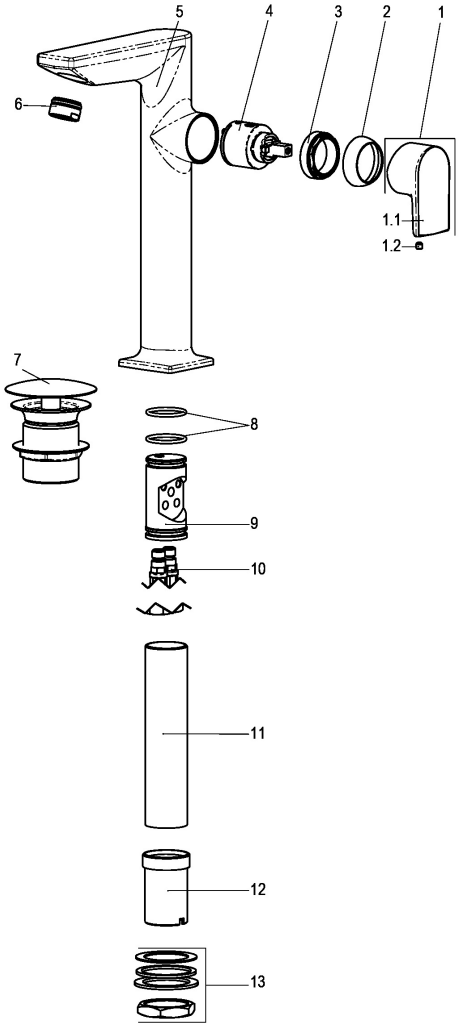

Spare parts list

Pos.	Description	Article-No.
01	SH OPERATING LEVER ALPHA	MF69997-00080
03	SH SCREW CONNECTION TO LINE 62	Z009111-00000
04	SH CARTRIDGE FOR HIGH PRESSURE	Z009200-00000
06	SH SSR AERATOR CL. A	MF13959-00080
10	SH FLEXIBLE HOSE M8 X 1 - 3/8"	Z009177-00000
13	SH SCREW CONNECTION M34 X 1,5	Z009196-00000

Optional accessories

Description	Article-No.
SH SIPHON STYLE DE LUXE MASSIF	MF55556-00080
SH CORNER VALVE	MF55563-00080