Z059801-00010 SH KITCHEN MIXER ALPHA_300

Product image

Dimensioned drawing

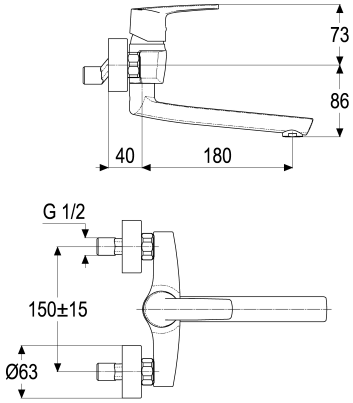

Product description

Kitchen wall mounted mixer
chrome
aerator flow rate class A
noise level test mark PA-IX 7260/IIA
suitable for instantaneous water heaters

Tender specification

Z059801-00010
Heinrich Schulte
Kitchen wall mounted mixer
alpha_300
chrome
reach 180 mm
centre distance 135 - 165 mm
open cartridge 35 mm
with hot water and flow rate limiter
spout swivelling
materials in accordance with German
Drinking Water Regulations and FEA
lever metal
aerator flow rate class A
noise level test mark PA-IX 7260/IIA
for wall mounting
suitable for instantaneous water heaters

VPE: 1
GTIN: 4020929598019
SCIP: afdad338-7d31-48b2-ba67-c3e8bc2cf1ae

Exploded drawing

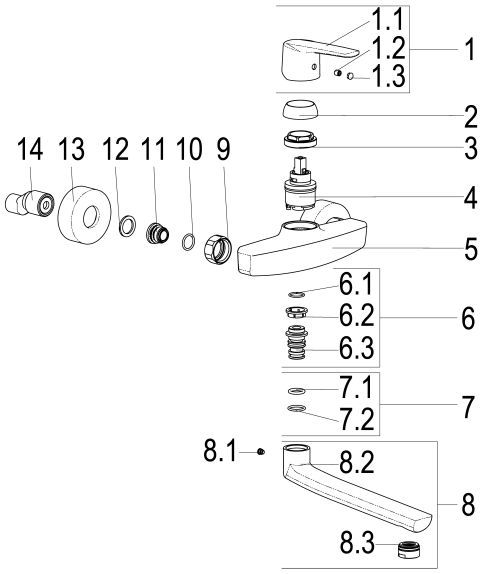

Spare parts list

Pos.	Description	Article-No.
01	SH OPERATING LEVER ALPHA_300	Z059990-00010
03	SH SCREW CONNECTION M37 X 1,5	Z009472-84000
04	SH CARTRIDGE FOR HIGH PRESSURE	Z009203-00001
06	SH GUIDE NIPPLE COMPLETE	Z009801-00010
07	SH SEAL KIT	Z001814-00000
08	SH SPOUT KITCHEN WALL-MOUNTED M.	Z054801-11010
09	SH WALL CONNECTION NUT 3/4"	Z000144-00010
11	SH CONNECTION NIPPLE WITH O-RING	Z000147-00000
13	SH ROSETTE LINE 51 + 61	Z009469-00010
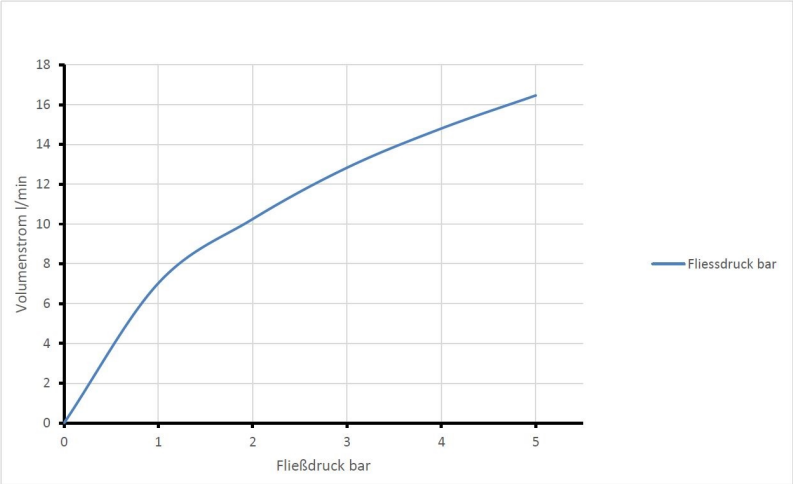
Flow rate diagram